Sectional Drawing

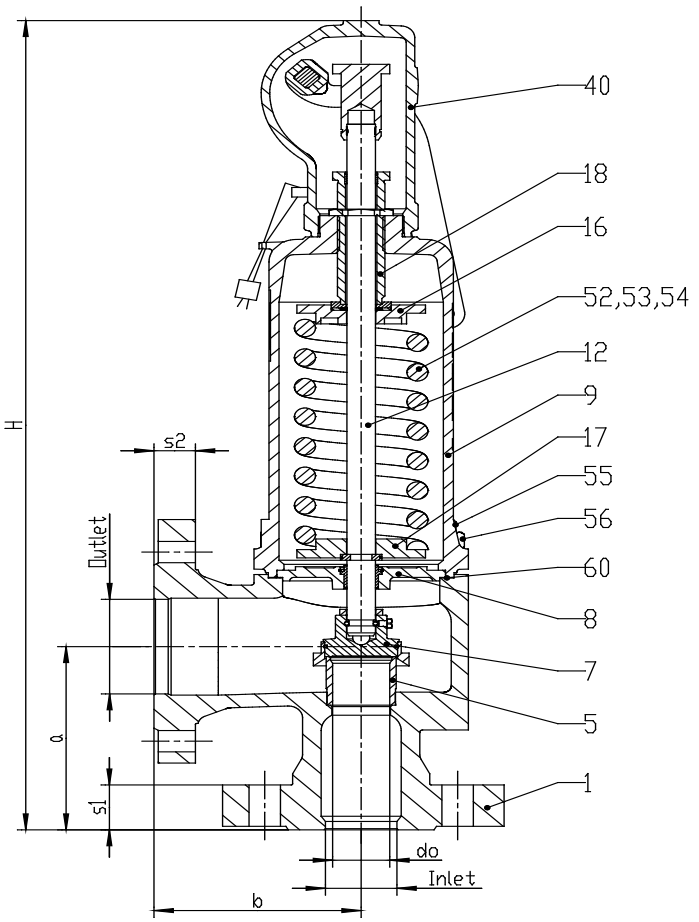

LESER General Arrangement Drawing (GAD) - initial submission acc. LESER-Standard LGS 3012: Image is a scaled model of the actual valve.
This document is done automatically and is valid without signature.

Tag Numbers

Valve Application

Description	Valve Data
Article No.	4562.6014
Product Group	High Performance
Valve Type	Conventional Design
Bonnet type	Bonnet closed
Orifice	not applicable
d0	20,0 mm 0,787 "
Set Pressure	55,00 bar-g
Cold Diff Test Pressure (cdtp)	55,00 bar-g
Inlet Connection	DN 25
	PN 160 DIN EN 1092
	Form B2: "smooth finish"
Outlet Connection	DN 50
	PN 40 DIN EN 1092
	Form B1: "rough" DIN EN 1092

Dimensions & Weight

Descriptions	Values
Weight	21,6 kg
a	122 mm
b	120 mm
H	493 mm
s1	29 mm
s2	28 mm

Further Data

LESER GAD-No.
10000430496-00

Bill of Material

Pos.	Description	Material Grade	Qty.	Remarks
1	Angular body	1.0619/SA-216 WCB/WCC - CS	1	
5	Seat	1.4404/316L - SS	1	
7	Disc	1.4122 - SS	1	Hardened
8	Guide	1.0501 - CS	1	
9	Bonnet	0.7043/GGG 40.3 - CS	1	
12	Spindle	1.4404/316L - SS	1	
16	Spring plate	1.4404/316L - SS	1	
17	Spring plate	1.0718 - CS	1	
18	Adjusting screw	1.4104/430F + PTFE/glass	1	
40	Cap/ Lifting device	0.7040/60-40-18 - Cast Iron	1	
52	Spring	-	-	not applicable
53	Spring	-	-	not applicable
54	Spring	1.8159 or 1.7102 or FDSiCr-CS	1	
55	Stud	1.7225/ SA-193 B7/ SA-320 L7 - CS	4	
56	Nut	1.7225/SA-194 Gr.7/SA-320 7L	4	
60	Gasket	Graphit/1.4401 - SS	1	

Rev.	Status	Editor	Releaser	Date
00	Issue for approval	SAP	GöE	12.07.2019

LESER The-Safety-Valve.com

LESER GmbH & Co. KG, Germany

LESER Job-No. / item	**10270688 / 10**
Ref. Job-No. / item	
Client PO-No.	**363489**
Client	Impexron GmbH
Project Title	
Unit	
Drawing Title	**GENERAL ARRANGEMENT DRAWING CONVENTIONAL SAFETY RELIEF VALVE**
Sheet	**1 / 1**
Client DWG-No.	
Client Rev.	