THIS DRAWING IS UNPUBLISHED.
VERTRAULICHE UNVEROEFFENTLICHTE ZEICHNUNG
© COPYRIGHT – By –

RELEASED FOR PUBLICATION
FREI FUER VEROEFFENTLICHUNG
– –, .

ALL RIGHTS RESERVED.
ALLE RECHTE VORBEHALTEN

MATED WITH:
PASSEND ZU:
HA 10

REVISIONS
AENDERUNGEN

P	LTR	DESCRIPTION BESCHREIBUNG	DATE	DWN	APVD
	D2	AS PER ECR-16-009336	07DEC2016	GCM	MKO

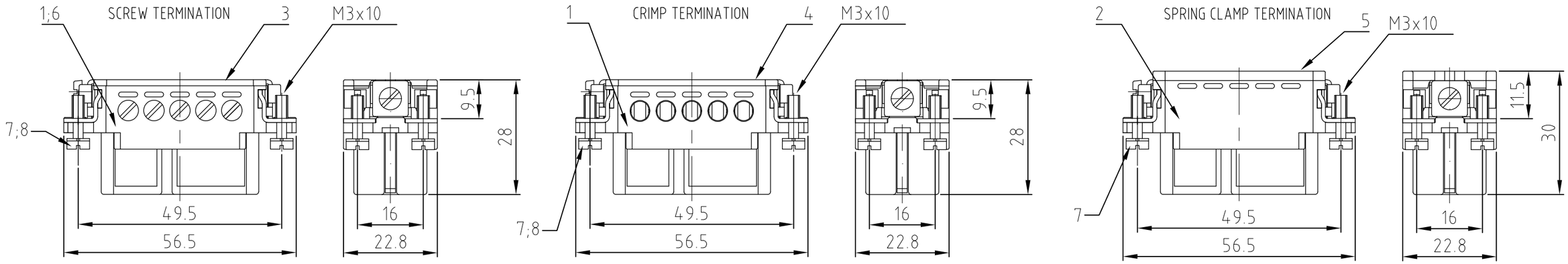

Assembling instruction

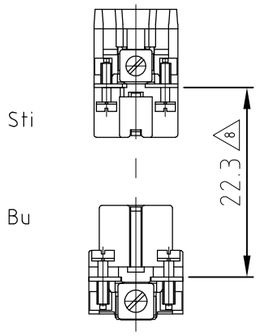

8 DISTANCE FOR SAFETY
CONTACT MARKING MAX. 24 mm

Panel cut-out for contact insert
when used without housing

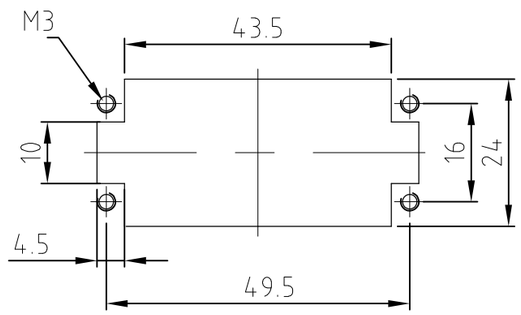

Contact arrangement / view from termination side

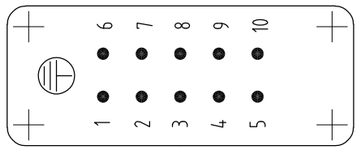

NOTES

1 SUITABLE CRIMP CONTACTS: SERIES HE/HA
OUTER DIMENSIONS OF INSULATION: MAX. Ø3,2 MM

2 SUITABLE HOOD SIZE 2: SERIES HA; HD
SUITABLE INSERTION AND EXTRACTION TOOL:
SCREWDRIVER 0,5x3 DIN 5264

3 Strip lenght: Screw conection 10mm
Spring clamp conection 10mm Crimp conection 7.5mm

4 STANDARDS:
DIN EN 61984; DIN EN 60664-1

5 PACKAGING
10 SETS IN A CARTON, PRE-MOUNTED

6 SPECIAL PACKAGING
200 PIECES IN A KANN-BAN BOT

7 SPECIAL PACKAGING
100 PIECES IN A KANN-BAN BOT

1-2	1-0	0-9	0-8	0-4	0-6	0-5	7-1	2-3	1-1	DESCRIPTION / BENENNUNG	MATERIAL	Surface	COLOR / FARBE	ITEM NO. POS.	NOTES
OBSOLETE	OBSOLETE	OBSOLETE			OBSOLETE	OBSOLETE									
				4		4				fixing screw	stainl. steel	blank/even		8	M3x10
4		4			4		4	4	4	fixing screw	Stahl/steel	nickel plated	blue	7	M3x10
					1					socket insert screw	PBT		light beige	6	with AU contact
							1			cover spring strain clip	PBT		light beige	5	
	1					1		1		cover crimp	PBT		light beige	4	
1		1	1	1	1				1	cover screw	PBT		light beige	3	
							1			socket insert spring strain clip	PBT		light beige	2	
1	1	1	1	1		1		1	1	socket insert crimp&screw	PBT		light beige	1	
7	5	6	5	5	5	5	5	5	5						
HA.10.Bu.S.WIE	HA.10.Bu.C-OBS	HA.10.Bu.S.KM	HA.10.Bu.S-OBS	HA.10.Bu.S-VA.	HA.10.Bu.S-AU	HA.10.Bu.C-VA	HA.10.Bu.SC	HA.10.Bu.C	HA.10.Bu.S						

ORDERING TEXT / BESTELLTEXT

THIS DRAWING IS A CONTROLLED DOCUMENT.
DIESE ZEICHNUNG IST EIN KONTROLLIERTES DOKUMENT.

DIMENSIONS:
MASSE\NHEITEN:
mm

TOLERANCES UNLESS OTHERWISE SPECIFIED:
ALLGEMEINTOLERANZEN
0 PLC ± –
1 PLC ± – n. ISO 8015 / n. ISO 2768 - mH-E / n. DIN 16901-140
2 PLC ± –
3 PLC ± –
4 PLC ± –
ANGLES / WINKEL ± –

MATERIAL
– 5

FINISH/OBERFLAECHE/FARBE
–

DWN Schneider 08.02.2000
CHK Schweiger 08.02.2000
APVD –
PRODUCT SPEC PRODUKTSPEZ. 108-74007
APPLICATION SPEC VERARBEITUNGSSPEZ. 114-74009
WEIGHT GEWICHT

TE Connectivity

NAME
Socket insert
Buchseneinsatz HA.10.Bu
–

SIZE	CAGE CODE	DRAWING NO ZEICHNUNGS-NR.	RESTRICTED TO NUR FUER
A3	00779	C-1103415	—

CUSTOMER DRAWING/KUNDENZEICHNUNG
SCALE MASSSTAB 1:1
SHEET BLATT 1 OF VON 1
REV D2