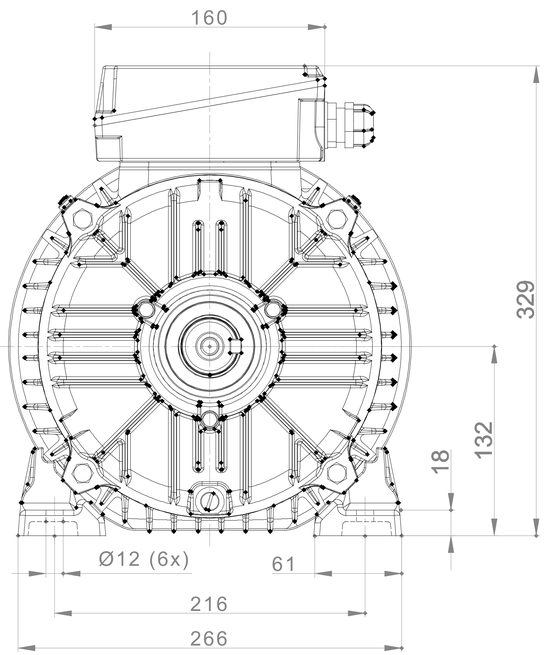

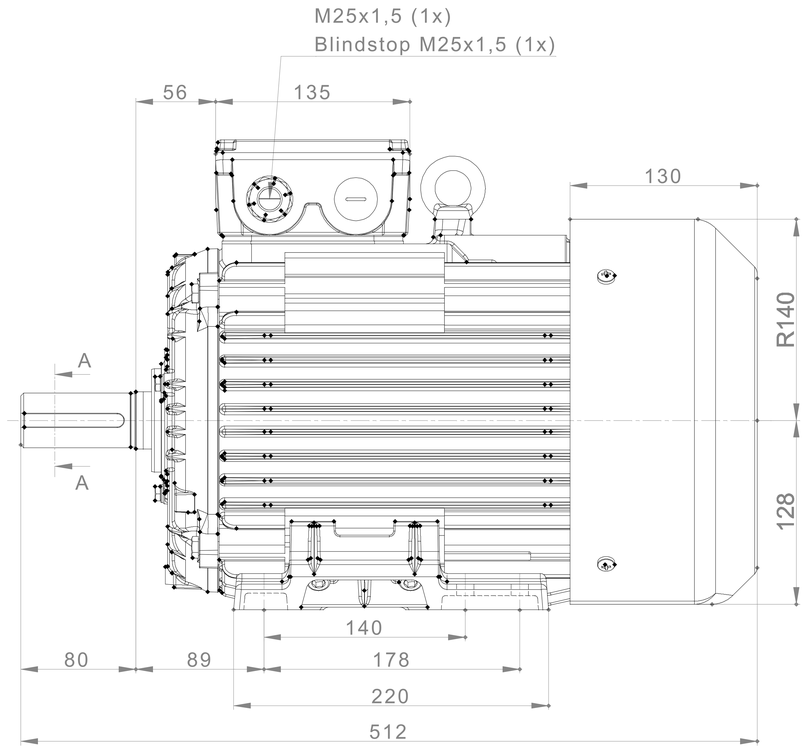

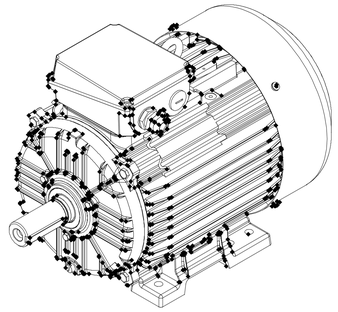

SECTION A-A

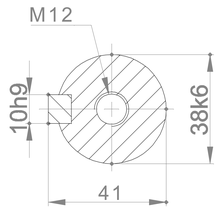

All dimensions are in mm and according to IEC 60072

Motor: CANTONI MOTOR	Feet:	B3	Customer:		KOLMER ELEKTROMOTOREN	Projection:
	Flange:	None	Quotation number:			
Mounting possibilities:	Dimensions are valid for motor type:		Article number:		Drawn by: JL	US
IM B3 B6 B7 B8 V5 V6	3SIE 132M4	3SIE 132S4	Special remarks:		Approved by: OB	
IM 1001 1051 1061 1071 1011 1031	3SIE 132M6A,B	3SIE 132S6			Date: 17-03-2015	REV. 0
	3SIE 132S2A,B				Drawing number: T1313.000001.R0	Sheet 1/1