RBC PROPRIETARY AND CONFIDENTIAL INFORMATION
This document is the property of REGAL BELOIT CORPORATION ("RBC") including its subsidiaries and divisions and contains proprietary information of RBC. This document is loaned on the express condition that neither it nor the information contained therein shall be disclosed to others without the express written consent of RBC, and that the information shall be used by the recipient only as approved expressly by RBC. This document shall be returned to RBC upon its request. This document may be subject to certain restrictions under U.S. export control laws and regulations.

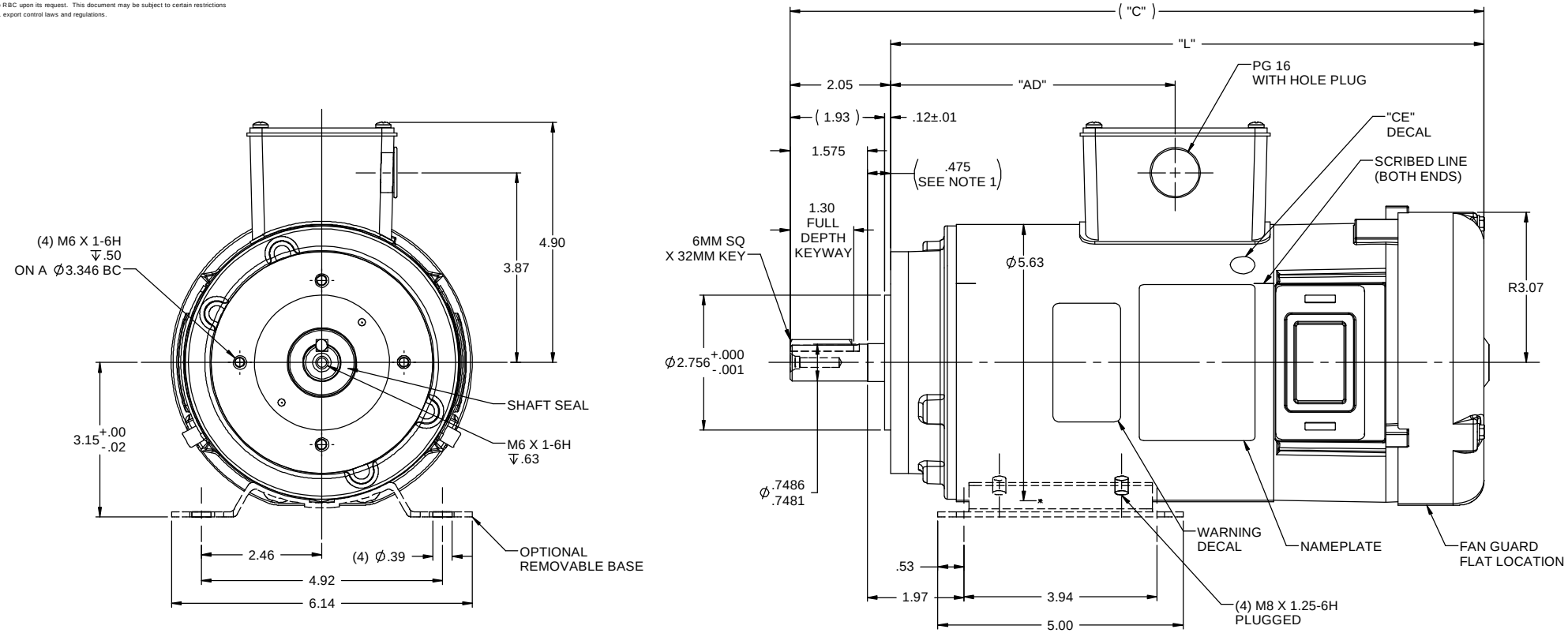

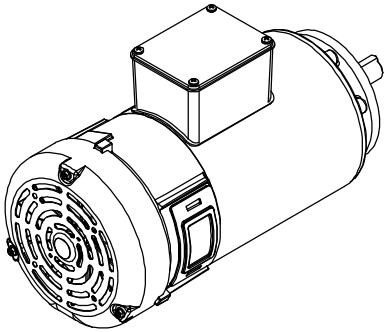

NOTES:
1) DIMENSION IS SPACE PROVIDED FOR A BOLT-ON B5 OR B14 ADAPTER KIT FOR THE IEC 80 FRAME.
2) MAXIMUM FACE RUNOUT TO BE .004 T.I.R.
3) MAXIMUM PILOT ECCENTRICITY .004 T.I.R.
4) PERMISSIBLE SHAFT RUNOUT .002 T.I.R.
5) GASKETS THROUGHOUT.

CATALOG No.	"C"	"L"	"AD"	VOLTS	K.W.	RPM
108369.00	14.15	12.10	5.81	180	.55	1800
108370.00	15.15	13.10	6.81	180	.75	1800
108371.00	17.15	15.10	8.81	180	1.1	1800
108372.00	14.15	12.10	5.81	180	.75	3000
108373.00	15.15	13.10	6.81	180	1.1	3000

NO	REVISION	BY & DATE	CHK
04	CHANGED 1.93 & .475 DIMS TO REF, ISAAC 12-1122	IPG 3/27/12	
03	ADDED NOTE ABOUT FAN GUARD FLAT LOCATION, ISAAC 09-4813	IPG 12/9/09	
02	CAT. # 108371.00: "C" WAS 17.65, "L" WAS 15.60, "AD" WAS 9.31, ISAAC 09-1828	IPG 5/14/09	SK
01	UPDATED SCRIBED LINE LOCATION PER FRAME CHANGE,	IPG 2/18/09	SK

TOLERANCES UNLESS SPECIFIED

DEC	INCHES
.X	±.1
.XX	±.03
.XXX	±.005
.XXXX	±.0005
ANG	±1/2°

LEESON ELECTRIC MOTORS GEARMOTORS AND DRIVES

TITLE OUTLINE
48 FRAME DC - IEC 80

MAT'L
FINISH

DRAWN IPG 6/24/08
CHK BC 6/24/08
APPR
SCALE 1:2
REF 030855
FMF 108369.75
PAGE OF

THIRD ANGLE PROJECTION

RFP
PREV
NETWORK FILE NAME 031898

SIZE B
DRAWING NO 031898
REV 04

3/27/2012 3:04:33 PM - Converted by Connexus