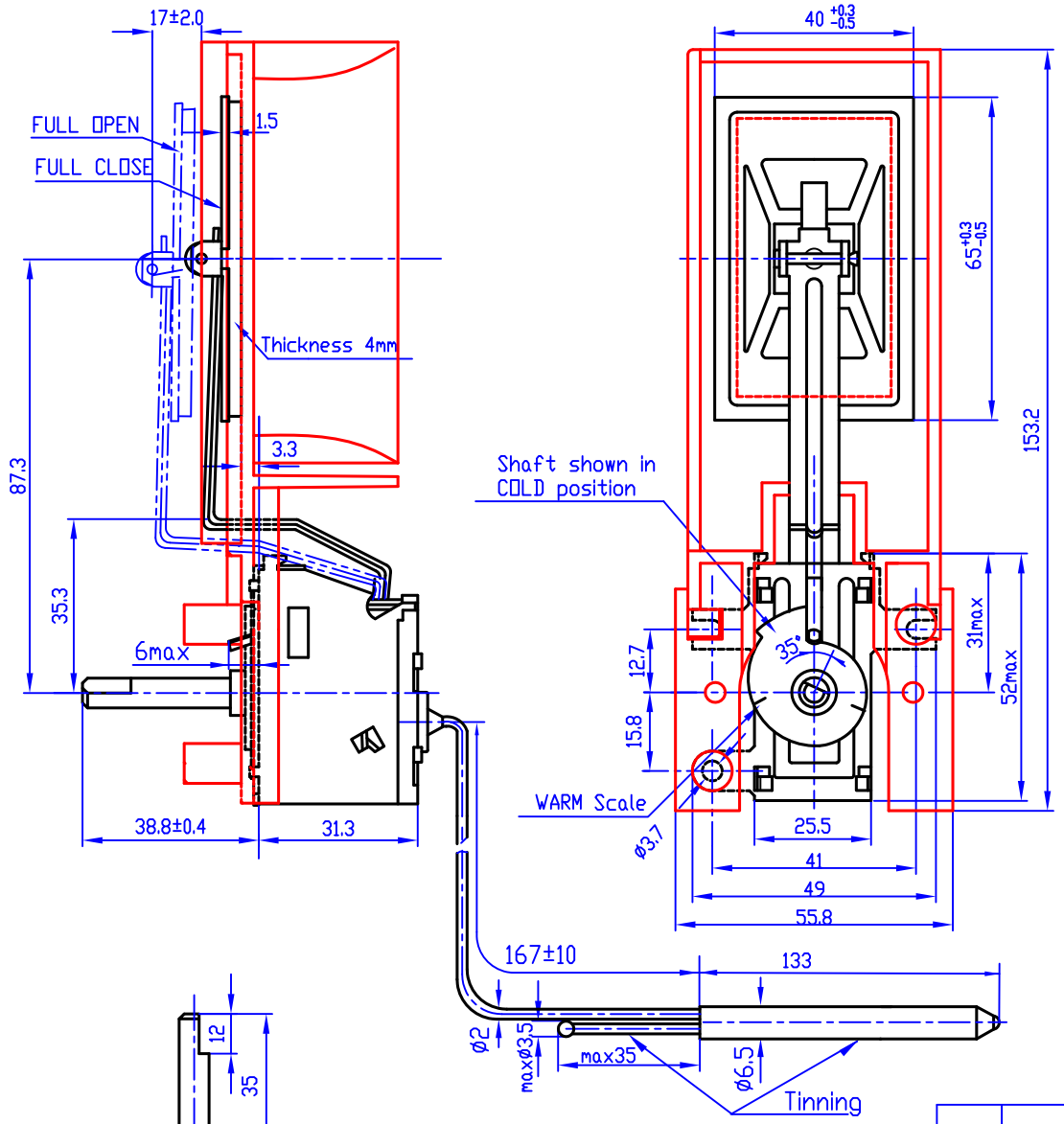


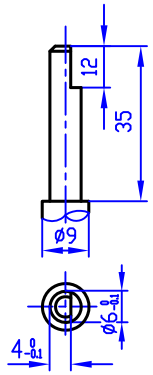


Adjusting shaft

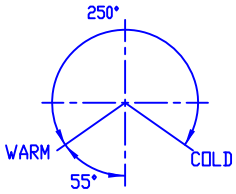


Rotating Angle

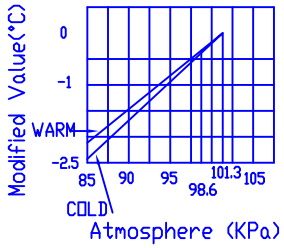


| Operating Temperature | | COLD(C) | WARM(W) |
|---|---|---|---|
| | FULL OPEN (°C) | ——— | ——— |
| | FULL CLOSE (°C) | -13±1.5 | -0.5±2.0 |
| | STROKE (mm) | 17±2.0 | ——— |
| | The second testing temp is taken asa accurate value. The temp. in brackets is reference value. All temperature settings are at 25°C ambient temperature and 101.3KPa atmosphere. | | |

| | |
|---|---|
| Kind of charge | C-charge |
| Conditions of Operating Temp. | TS ≧ TB TS: Temperature Around the Main Frame TB: Temperature around the Sensing Element |
| Response Characteristic of Sensing Element | Testing medium: Liquid Temp. change rate: ≦ 0.5°C/min |
| Max. Temperature | Around the Main Frame: 70°C Around the Sensing Element 70°C |
| life of stroke | 100,000 cycles (The stroke is 17mm) |
| Rotating Moment of Adjusting shaft | COLD —— WARM 0.02-0.30N.m |

Remarks :

1. The calibration is made at the horizontal shaft and the horizontal damper
2. When the damper plate closed any edge of plate must be within 1.5mm
3. Before delivery, the shaft at WARM position.
4. Modification chart (10°C changing of ambient temperature,modified 0.25°C)

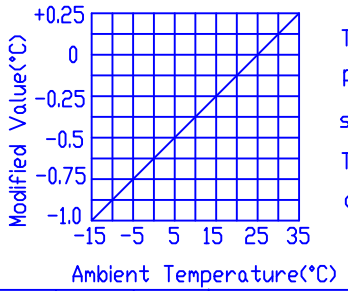


Take an example: When the ambient temperature is 15°C and the temperature setting is -12.75°C, modified value is -0.25°C. Thus, the operating temperature at 25°C ambient temperature is converted into:

(-12.75°C)+(-0.25°C)=-13°C

| Rejigger Mark | Quantity | Rejigger Number | SIGN | DATE |
|---|---|---|---|---|
| DESIGNED BY | | | | |
| CHECKED BY | | | | |
| INSPECTED BY | | | | |
| TECHNOLOGY | | | | |
| NORMALIZED BY | | | | |
| APPROVED BY | | | | |

Damper Type Thermostat

WMF14G-700
(KGN 5300_0000011509)
(Material No.:9000109386)

| Design Mark | Number | Weight(kg) | Proportion |
|---|---|---|---|
| S | | | |

FOSHAN TONGBAO CO., LTD.